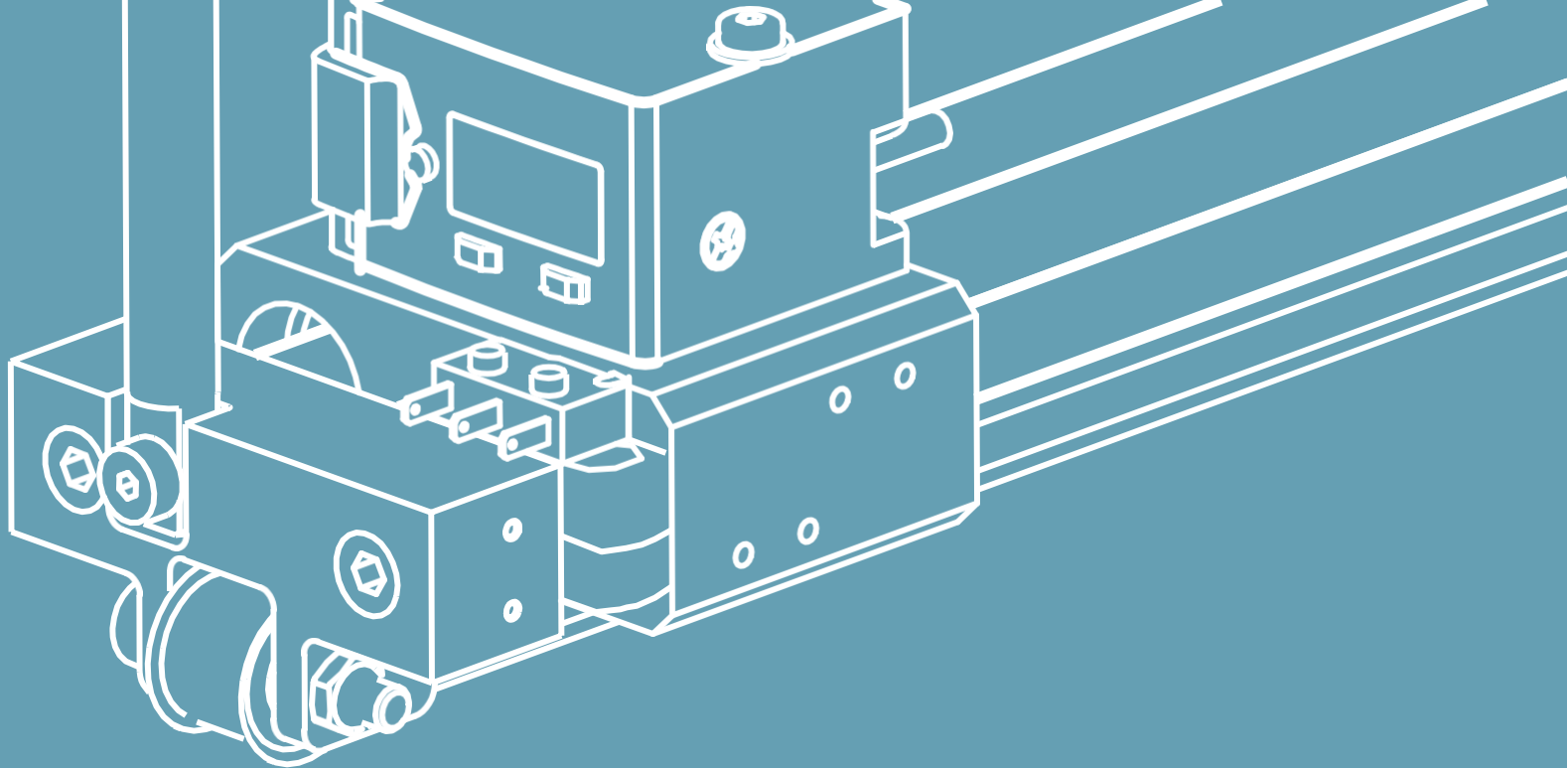

LASER® WARP STOP MOTION

WE GIVE YOU A RAY OF LIGHT

EffeDi Meccanotek

EffeDi Meccanotek was born in the year 1988 in Vilminore di Scalve, in one of the Valley near Bergamo, Italy. The strong professionalism and know-how gained in the field of numerical control machining, led us growing quickly and becoming a large and solid reality in the Textile World for over 30 years.

The strong motivation and the very deep passion for their work were the reasons that led the Duci brothers to found the company and to drive it into the right way to find the current success.

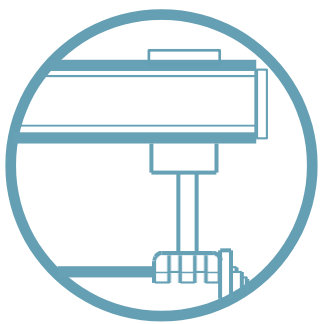

RELIABILITY

First purpose of the management has always been Customer Satisfaction, with special attention to the After Sales. We place always the customer in the foreground by constantly solving and proposing targeted solutions.
Our products are daily tested and overseen from our R&D and quality department within the company and in external laboratories, too, in order to improve performance and reliability day after day.

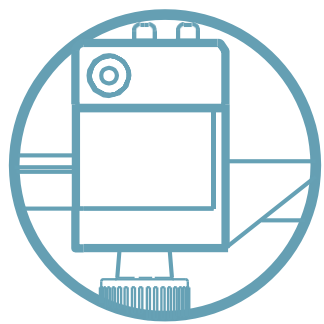

QUALITY

We are today recognized in the Textile Market for the high quality and the careful manufacture of our products. Currently, we provide with satisfaction to the biggest OEM Heald Frames & Warp Stop Motions for brands as like Vamatex, Somet, Panter, Smit, Sulzer, Itema, Sultex, Picanol, Dornier, Van de Wiele. Moreover, we collaborate with agents on foreign territories such as India, Turkey, Pakistan and we have a Sales Network extended from USA to China.

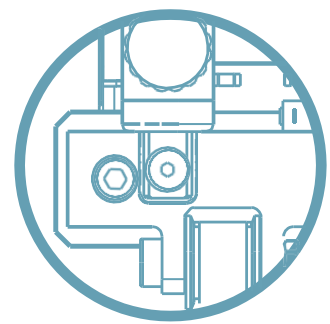

INNOVATION

The R&D department follows the market needs with special attention, with the aim of improving production processes and, above all, the functionality and reliability of the products that are daily sold all over the world. Everything is always realized closed with the Quality&Design Office for the effective compliance verification of all material and all processes in order to steadily ensure to customers the delivery of the best products.

AUGMENTED REALITY

Our strong attitude to innovation leads us today to be innovative in the field of communication, too.
Through the use of the augmented reality technique, our new goal is to let you interact with the product as a real experience and to allow you better detecting all the features and qualities of our products.

DOWNLOAD THE APP THROUGH THE QR CODE YOU FIND BELOW:

BY USING THE CAMERA ON YOUR PERSONAL DEVICE, FRAME THIS SYMBOL TOGETHER WITH THE COMBINED IMAGE AND LIVE THE INTERACTIVE EXPERIENCE OF EFFEDI MECCANOTEK.

THE PRODUCT

Quality has always been the protagonist of our warp stop motion. In all production phases, we have always considered the warp stop motion as a very important part of the loom.

The planning and the production of this device are focused on extreme weaving conditions in order to guarantee a functional and compact warp stop motion which would be able to work under the hardest conditions.

LASER® WARP STOP MOTION

Updated and revised version of the controlled WSM.
The single LED control is integrated with a Laser device which comes in when the drop wire is fallen and the loom stopped.
The device sends a ray which runs the entire length of the WSM and stops when it meets the drop wire as an obstacle and permits the lighting of a LED on a special bar which coincide with the right area where to find the thread.
In this way the operator would be able to notice the exact position of the broken thread saving time to restart the weaving.

Led useful for identifying the right contact bar on which the drop wire is fallen

Led useful for identifying the exact position of the fallen drop wire on the contact bar

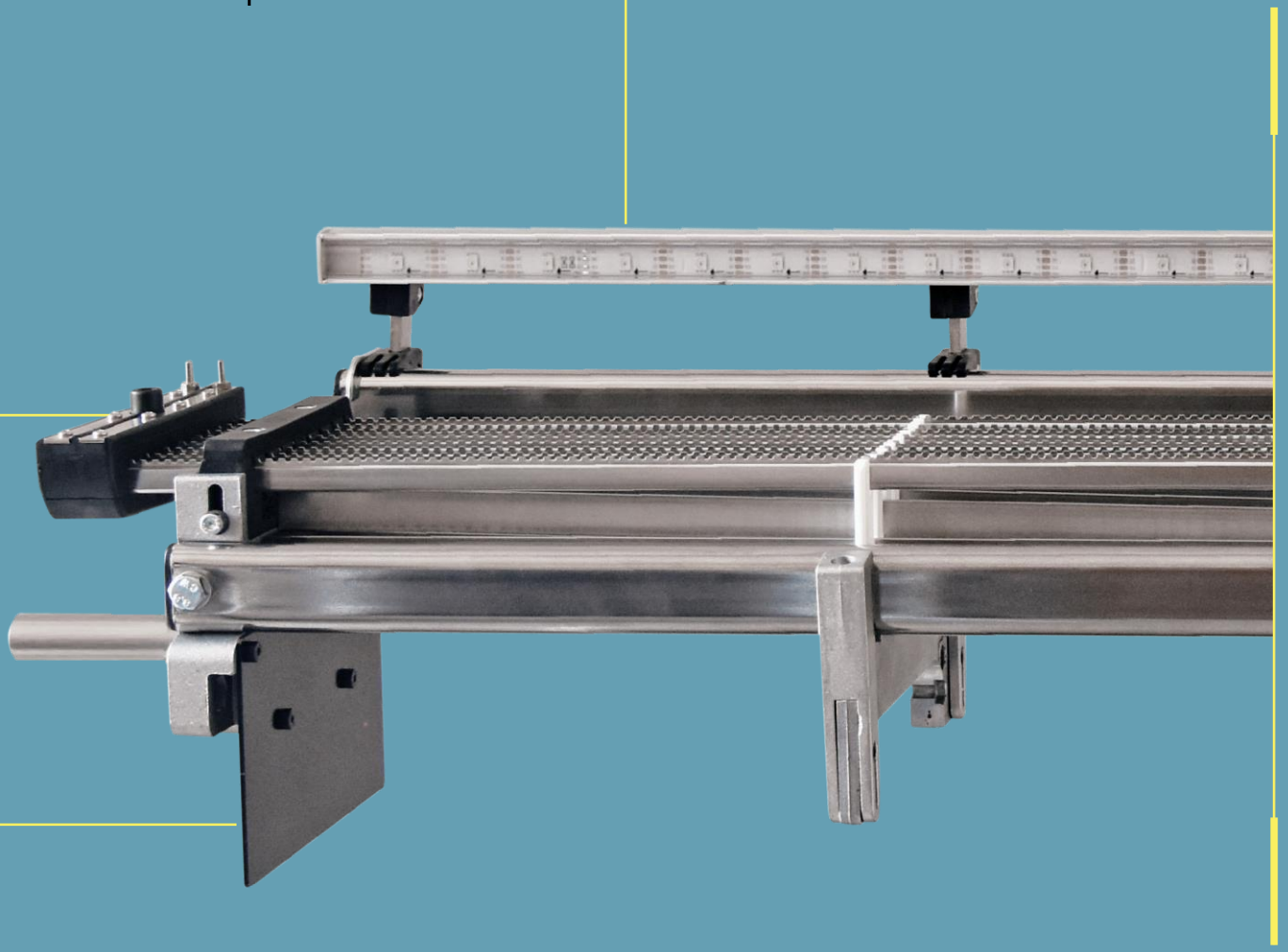

Delimiting plate which mark the end of the laser beam

Application available on
all WSM model
A36C - A68C & A625/7

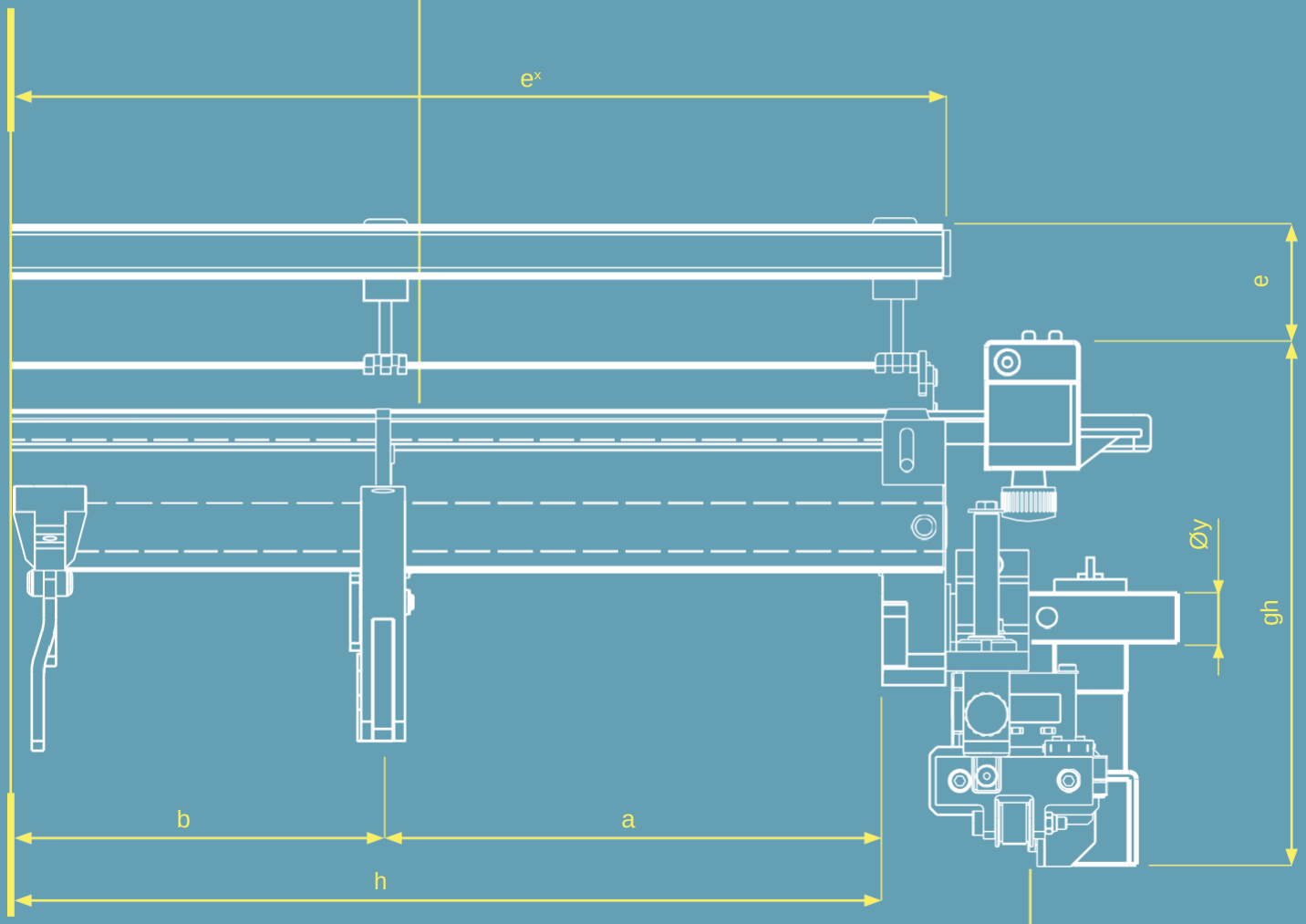

Laser device used for fallen
drop wire searching

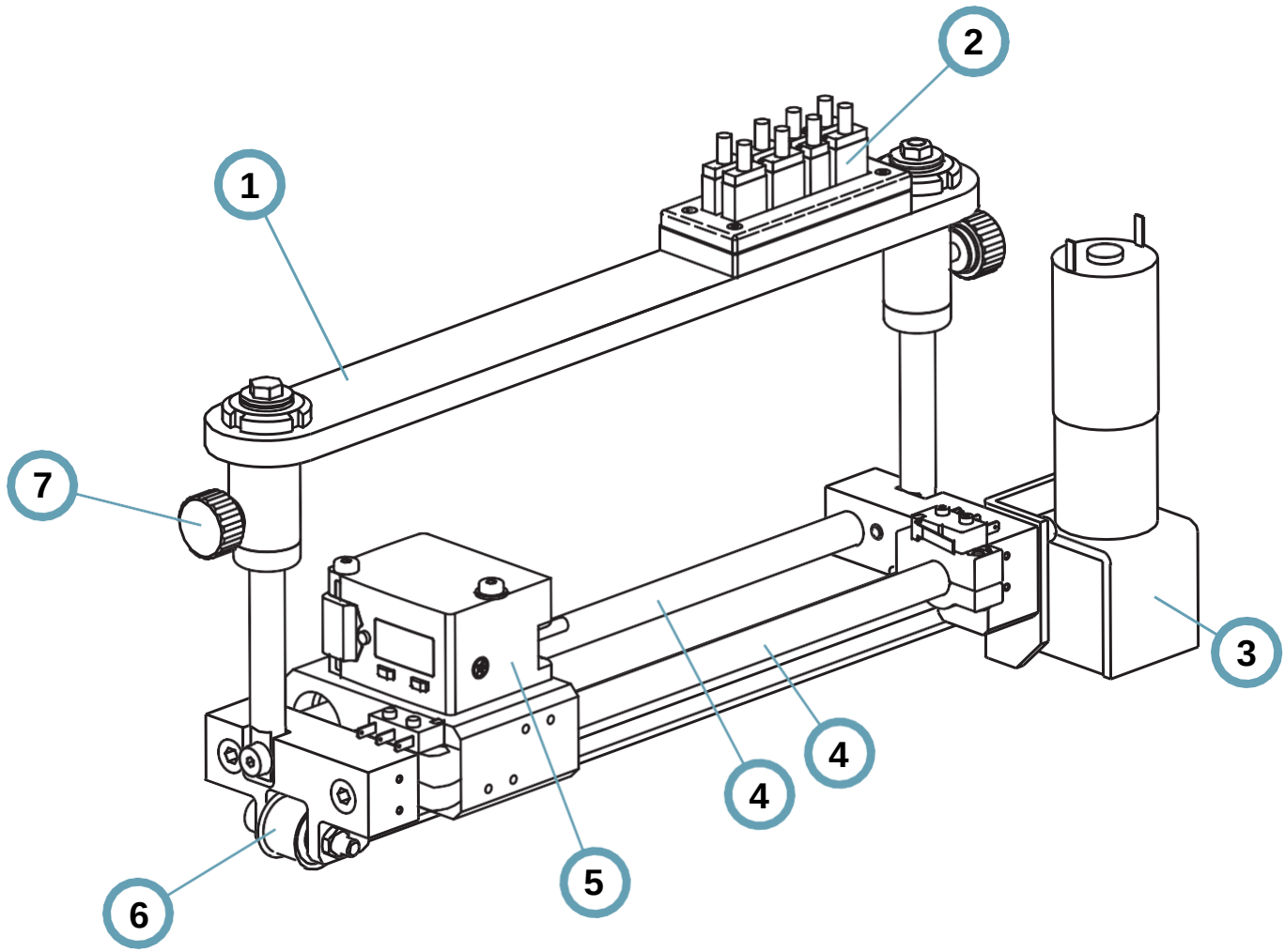

1 Plate
2 Connectors
3 Gearmotor
4 Horizontal axis
5 Laser
6 Strap
7 Handle

EffeDi Meccanotek

Effedi Meccanotek S.r.l.
Località Roccolo 5 | 24020 Vilminore di Scalve (BG) | Italy
T. +39 0346/51485 | F. +39 0346/50007
www.effedimeccanotek.it
commerciale@effedimeccanotek.it

Mod.7.2.03 Brochure G.O. Rev.1 del 29/05/2019

TÜV SÜD ISO 9001

Marketed by :

PIOTEX TEXTECH PVT LTD

"Malhar", Plot No.11/2, Survey No. 126, Walhekarwadi,
Near Atharv Park, Chinchwad, Pune - 411 033.
Maharashtra, INDIA.

Mobile : +91 8390115544, +91 8390116644

Web : www.piotex.in, Email : sales@piotex.in